NOTICE - PROPRIETARY INFORMATION
THE DESIGN AND RELATED INFORMATION CONTAINED HEREIN IS THE SOLE PROPERTY OF COFAN USA INC . THE DISCLOSURE OF THIS INFORMATION DOES NOT CONSTITUTE THE RELEASE OF ANY PROPRIETARY RIGHTS THEREIN. PERMISSION TO REPRODUCE THIS INFORMATION OR THE PRODUCTS DISCLOSED HEREIN MUST BE OBTAINED IN WRITING FROM COFAN USA INC.

REVISION HISTORY

REV	DESCRIPTION	DRWN	CHK'D	APPV'D	DATE
02	Change wide to 55.0, high to 11.8, remove two fins	Ajie	-	-	08/17/12

NOTES:
1. MATERIAL: AL 6063-T5
2. FINISH: ----
3. DEBURR AND BREAK ALL SHARP EDGES..
4. (X) IS CRITICAL INSPECTION POINT. NUMBERING IN TRIANGLE IS TO BE USED FOR CROSS REFERENCE OF INSPECTION REPORT TO DRAWING DIMENSION OR FEATURE.
5. ALL DIMENSIONS TO INCLUDE APPLICABLE FINISH.
6. EXTRUDED SECTION AREA: 334.8 MM
   EXTRUDE WEIGHT: 0.91 KG/M.
7. EXTRUDE MOULD P/N: --

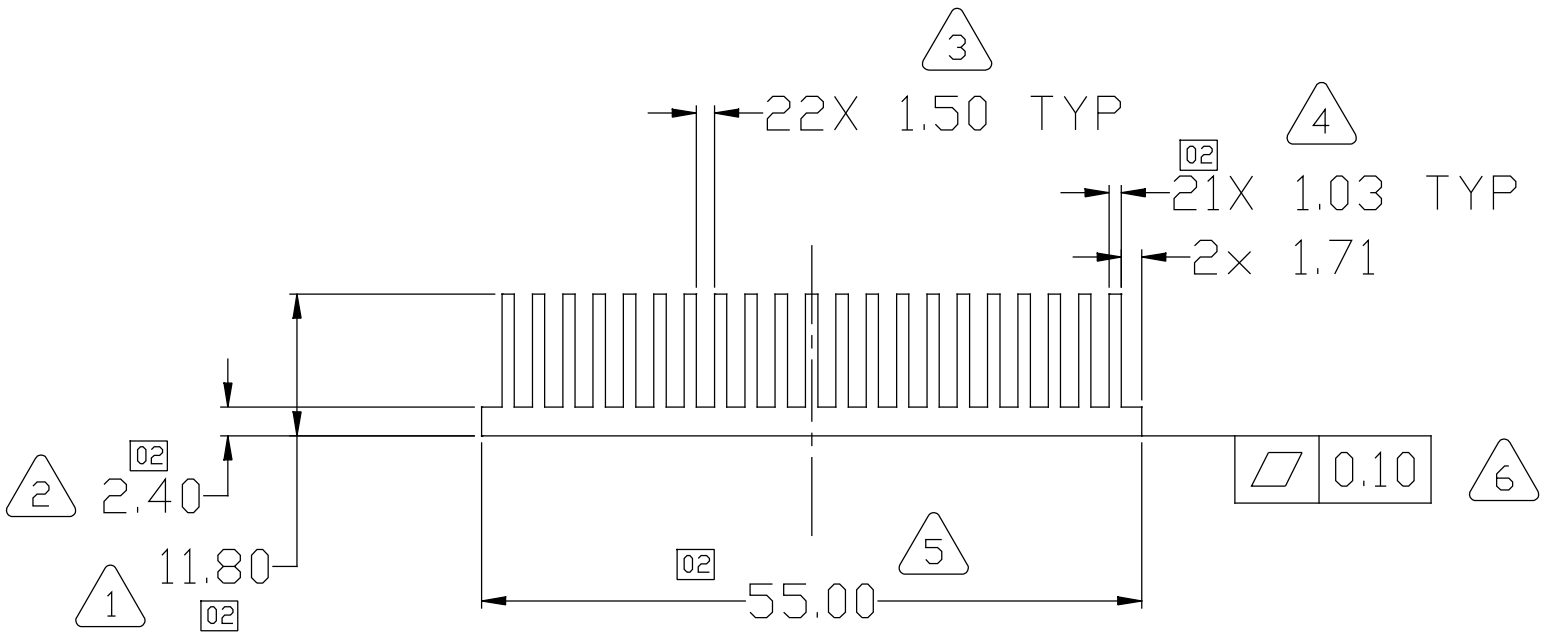

RoHS
COMPLIANT
2002/95/EC

DO NOT SCALE DRAWING	MATERIAL: See Note	CUSTOMER PART NUMBER: ----	COFAN USA 48664 MILMONT DRIVE, FREMONT, CA 94538
UNLESS OTHERWISE SPECIFIED DIMENSIONS ARE IN MILLIMETRE TOLERANCES ARE: 1 PLACE .X ± 0.25; 2 PLACE .XX ± 0.13; 3 PLACE .XXX ± 0.05; ANGLES EXCEPT 90° ± 1°; MAXIMUM SURFACE ROUGHNESS 3.2 √	DRAWN BY: Kevin	COFAN_USA PART NUMBER: For30-2684	NAME: HEAT SINK Extrusion
	CHECKED BY: Ajie	NEW COFAN PART NUMBER: 21.01.00635	SCALE: 1:1 / CUS REV: --- / COF REV: 02
	APPR BY: ---	UNIT: mm / SHEET: 1 OF 1	DATE DRAWN: Aug-17-2012